Improving IOP measurement uncertainties for PACE ocean color remote sensing applications

PI: Jim Sullivan
Co-I's: Mike Twardowski & Tim Moore
Collaborators: David McKee & Rudy Röttgers
Technical: Nicole Stockley

Western Environmental Technology Laboratories Inc.

HARBOR BRANCH
FLORIDA ATLANTIC UNIVERSITY®

Proposed research:

1. Quantify and improve <u>uncertainties</u> (scattering error) in absorption measurements using ac devices.

2. Determine uncertainties associated with different values of the depolarization ratio for pure seawater backscattering (b_{bsw}).

Proposed research:

1. Quantify and improve <u>uncertainties</u> (scattering error) in absorption measurements using ac devices.

<u>AC-S (hyperspectral)</u>
LVF filter split (~ 550 nm)
LVF registration errors (4 - 5 nm)
LVF λ bandwidth smoothing (14 – 19 nm FWHM)

<u>AC-9 (multispectral)</u>
IF λ bandwidth smoothing (10 nm FWHM)

<u>AC-S & AC-9</u>
instrument calibration drift (PW blank, internal T)
c acceptance angle (0.93°) (~ 20 - 30% underestimate of "*c*")
a scattering error (overestimate, ~ 20% of "*b*")
"*b*" (*c* – *a*) can easily be 50% lower than actual *b*

1. Quantify and improve uncertainties (scattering error) in absorption measurements using ac devices.

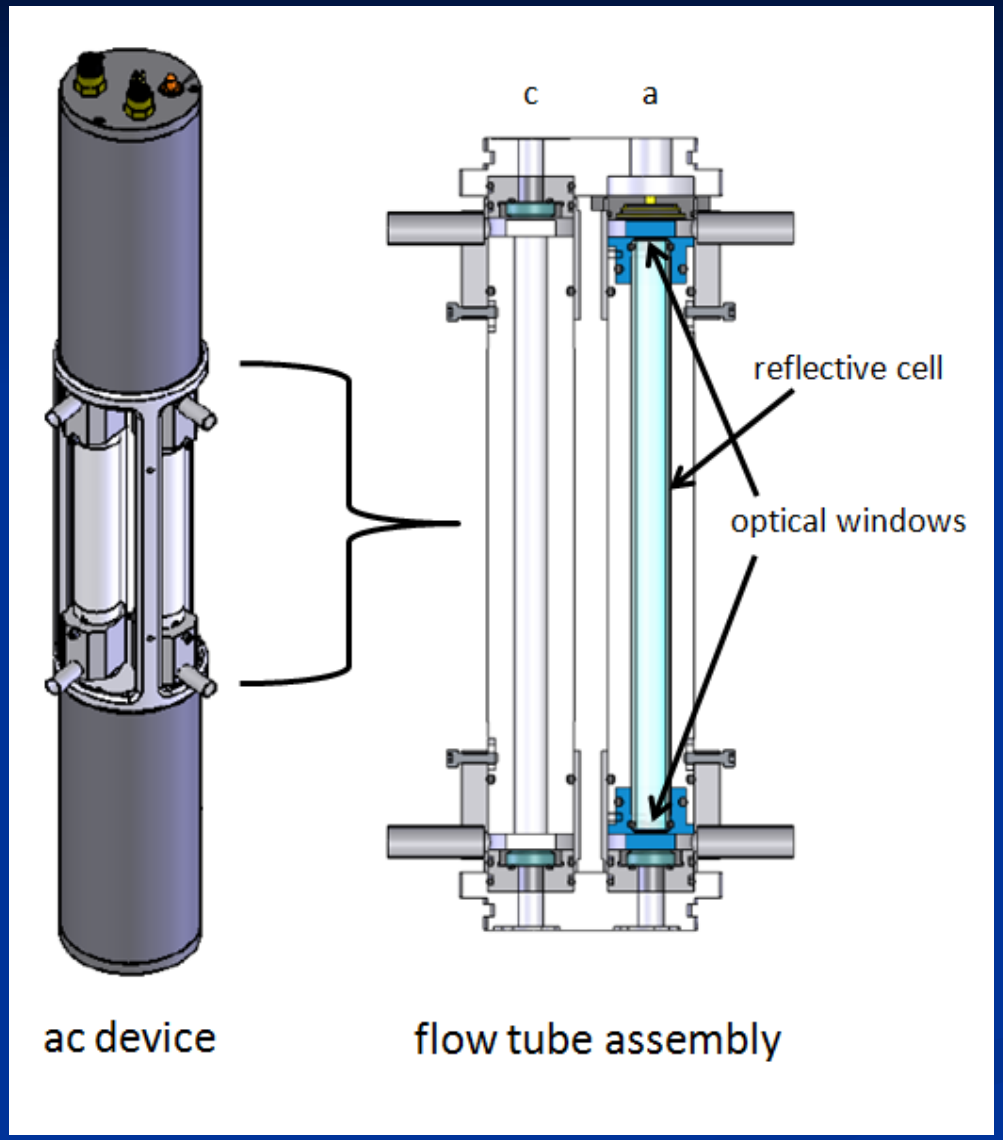

TIR = 41.7°

$$\varepsilon = \int_{\theta_{TIR}\,(41.7^\circ)}^{\pi\ (180^\circ)} 2\pi \sin(\theta)\beta(\theta)\,d\theta$$

1. Quantify and improve uncertainties (scattering error) in absorption measurements using ac devices.

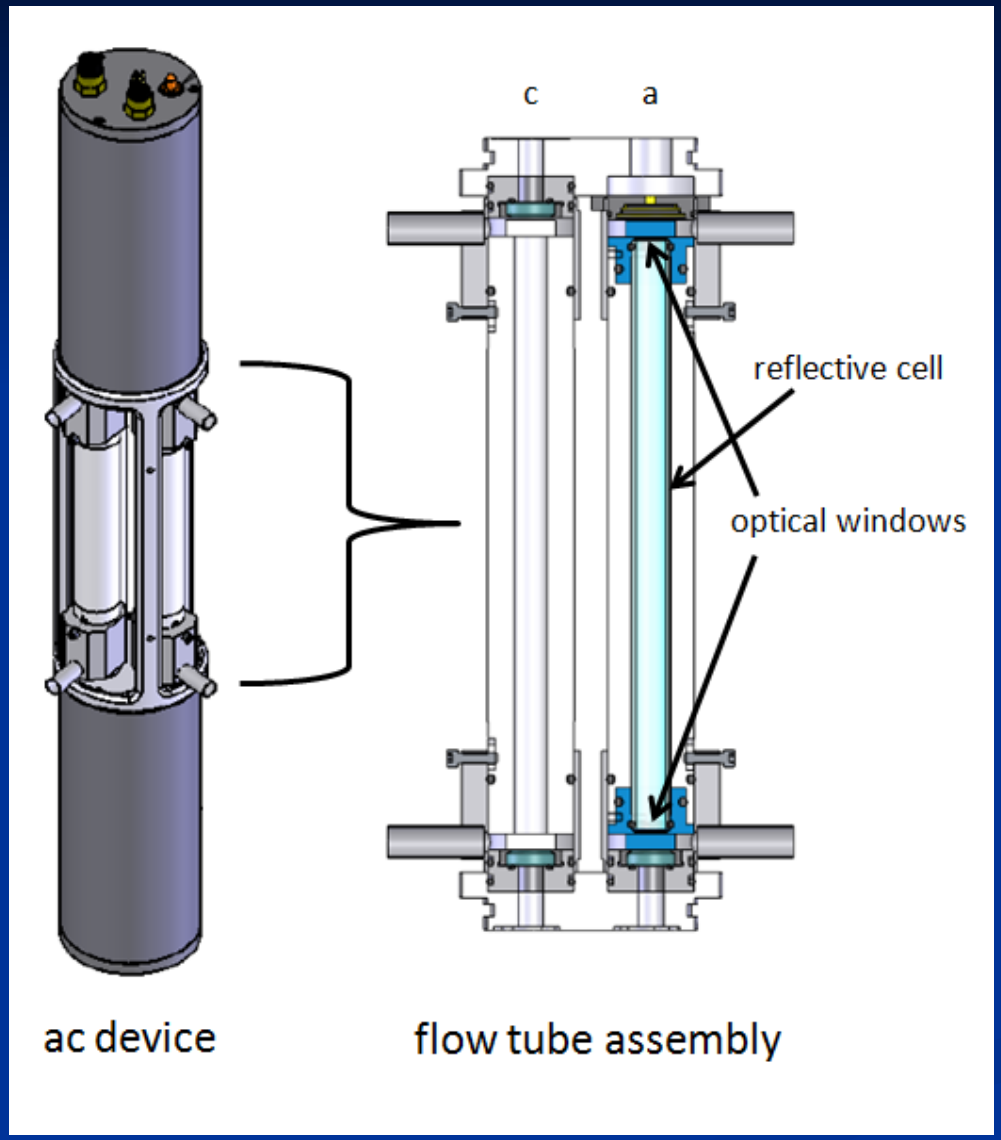

~ 5 - 6 correction methods

baseline subtraction using ref λ (Zaneveld 1)
constant % of *b* (Zaneveld 2)
% of *b* using ref λ (Zaneveld 3)
ref λ with % absorption removed (Röttgers)
iterative with b_b/b (McKee)
independent with VSF (Twardowski)

No community consensus

issues:

a at ref λ
spectral dependency (*b*, VSF)
a tube reflectivity variability

Reflectivity of *a* flow tubes

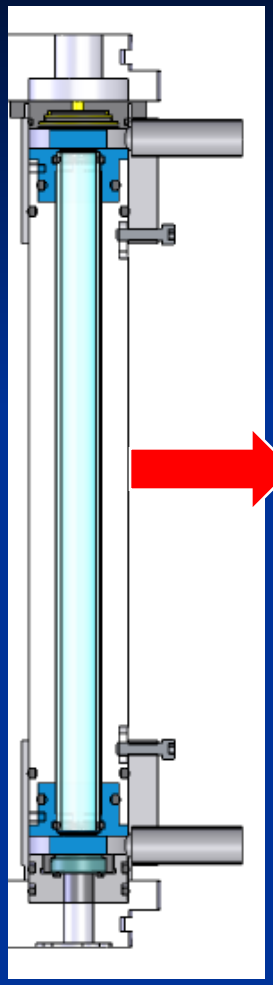

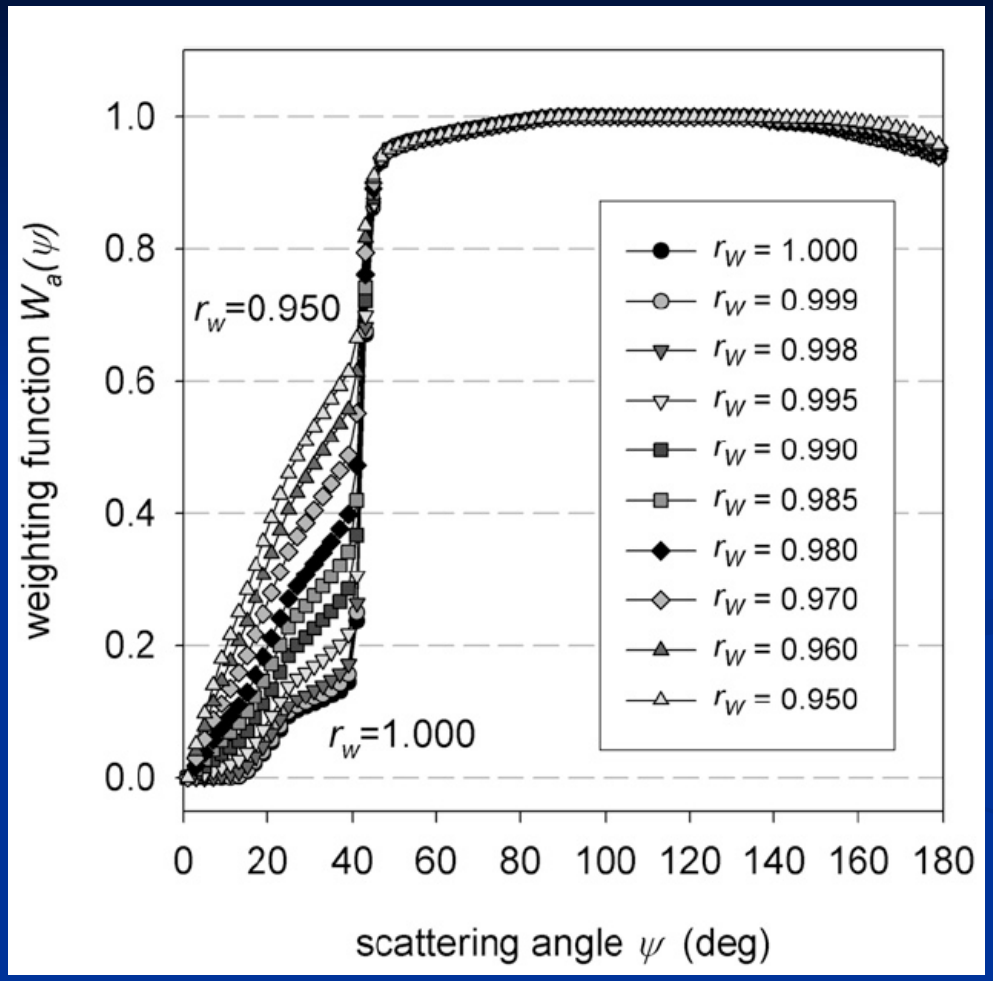

McKee et al. 2013

variable *a* with different aged flow tubes

theory: reflectivity decreases with age/use (96 – 98%)

Need to confirm/quantify reflectivity variability

$BaSO_4$ experiments (non-absorbing scattering solution)

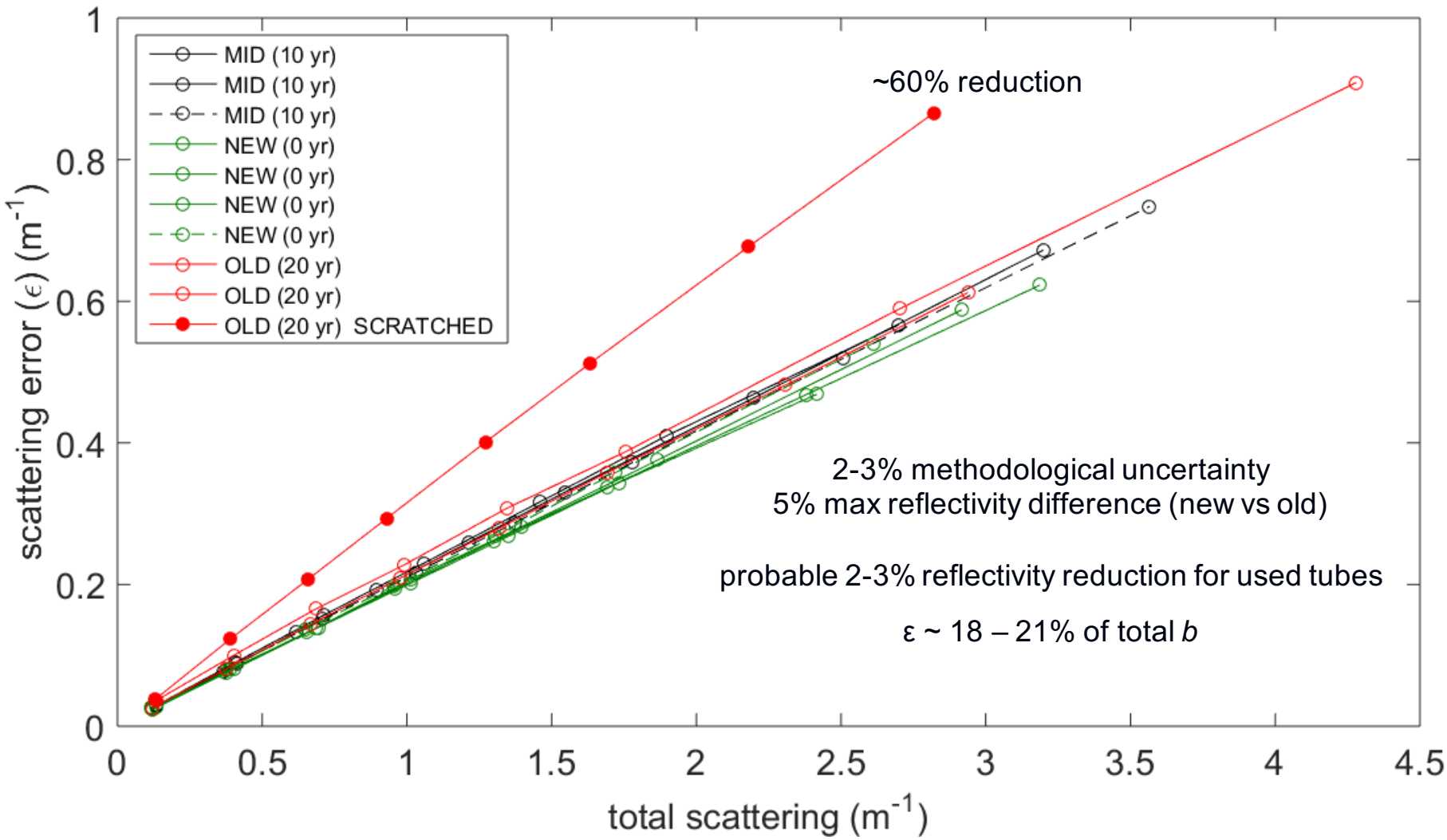

North Sea data comparisons

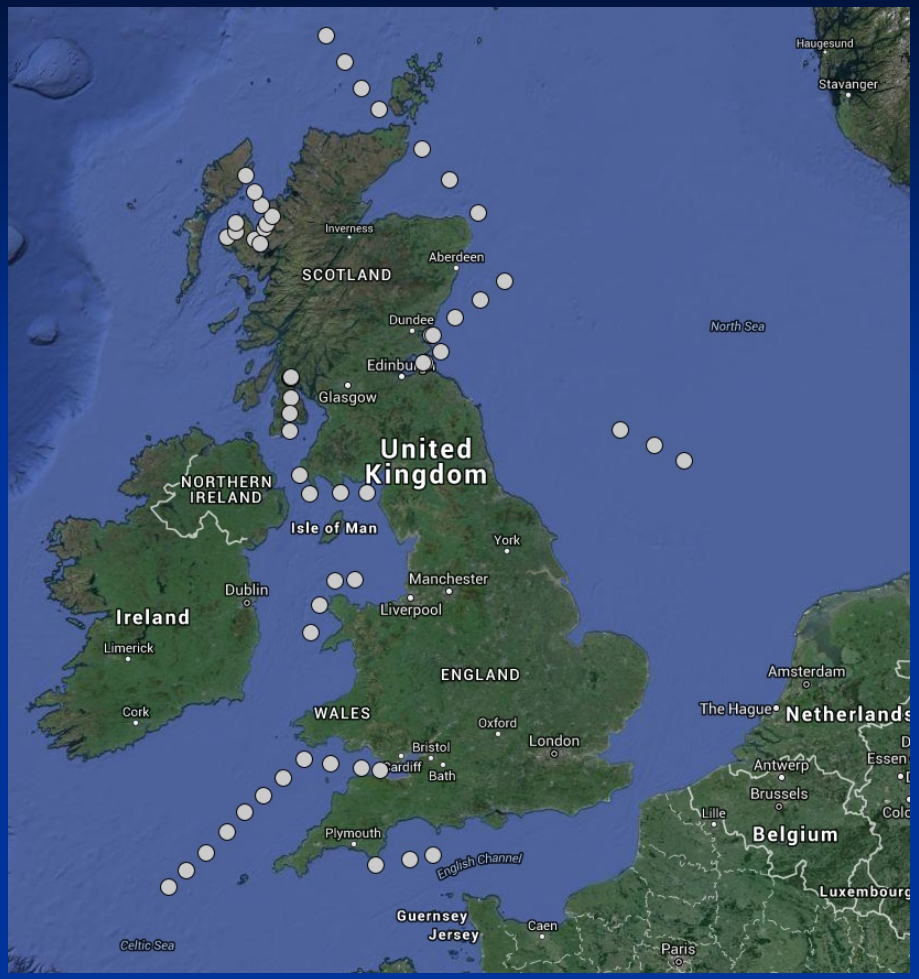

>30 different scattering correction methods compared with <u>independent validation</u> of absorption (56 stations).

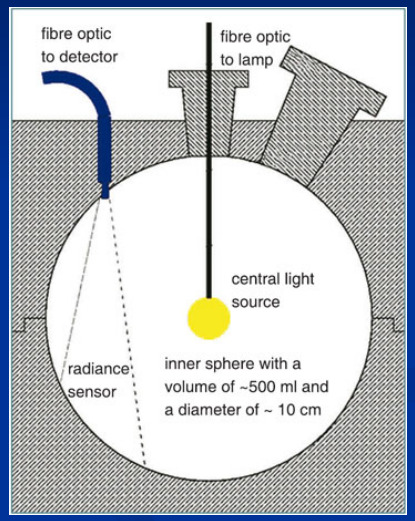

PSICAM (Röttgers) integrating cavity (no scattering error)

North Sea data comparisons

NAME	TYPE	METHOD
RZ1	baseline using ref	Zaneveld 1
RZ1-RR1	baseline w/ ref *a* corr	Zaneveld 1 MOD
RZ2-5	variable percentage	Zaneveld 2
RZ2-10	variable percentage	Zaneveld 2
RZ2-15	variable percentage	Zaneveld 2
RZ2-18	variable percentage	Zaneveld 2
RZ2-20	variable percentage	Zaneveld 2
RZ2-22	variable percentage	Zaneveld 2
RZ3	proportional	Zaneveld 3
RZ3-RR1	proportional w/ ref *a* corr	Zaneveld 3 MOD
VSFWF-100	baseline VSF w/ variable reflectivity	Independent
VSFWF-999	baseline VSF w/ variable reflectivity	Independent
VSFWF-998	baseline VSF w/ variable reflectivity	Independent
VSFWF-995	baseline VSF w/ variable reflectivity	Independent
VSFWF-990	baseline VSF w/ variable reflectivity	Independent
VSFWF-985	baseline VSF w/ variable reflectivity	Independent
VSFWF-980	baseline VSF w/ variable reflectivity	Independent
VSFWF-970	baseline VSF w/ variable reflectivity	Independent
VSFWF-960	baseline VSF w/ variable reflectivity	Independent
VSFWF-950	baseline VSF w/ variable reflectivity	Independent
VSFWF-100P	**proportional VSF w/ variable reflectivity**	**Independent**
VSFWF-999P	**proportional VSF w/ variable reflectivity**	**Independent**
VSFWF-998P	**proportional VSF w/ variable reflectivity**	**Independent**
VSFWF-995P	**proportional VSF w/ variable reflectivity**	**Independent**
VSFWF-990P	**proportional VSF w/ variable reflectivity**	**Independent**
VSFWF-985P	**proportional VSF w/ variable reflectivity**	**Independent**
VSFWF-980P	**proportional VSF w/ variable reflectivity**	**Independent**
VSFWF-970P	**proportional VSF w/ variable reflectivity**	**Independent**
VSFWF-960P	**proportional VSF w/ variable reflectivity**	**Independent**
VSFWF-950P	**proportional VSF w/ variable reflectivity**	**Independent**

>30 different scattering correction methods compared with <u>independent validation</u> of absorption (56 stations).

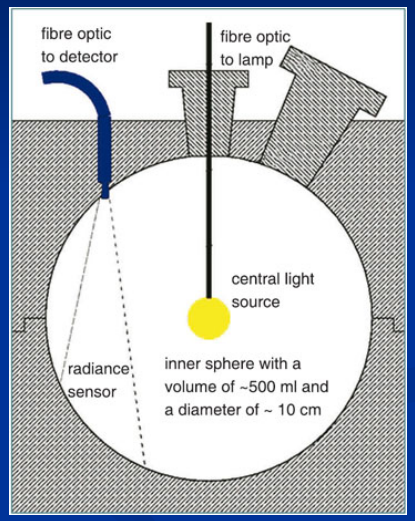

PSICAM (Röttgers) integrating cavity (no scattering error)

Independent correction with concurrent VSF measurements & tube *W(θ)*

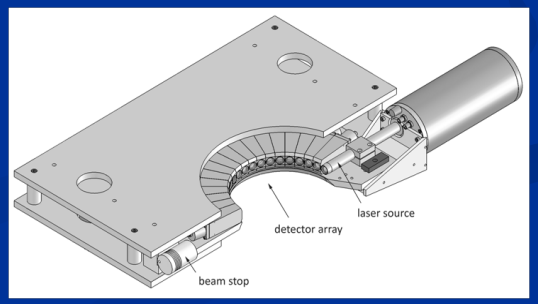

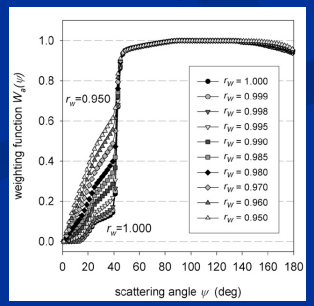

Scattering corrected ac data - best fits to PSICAM

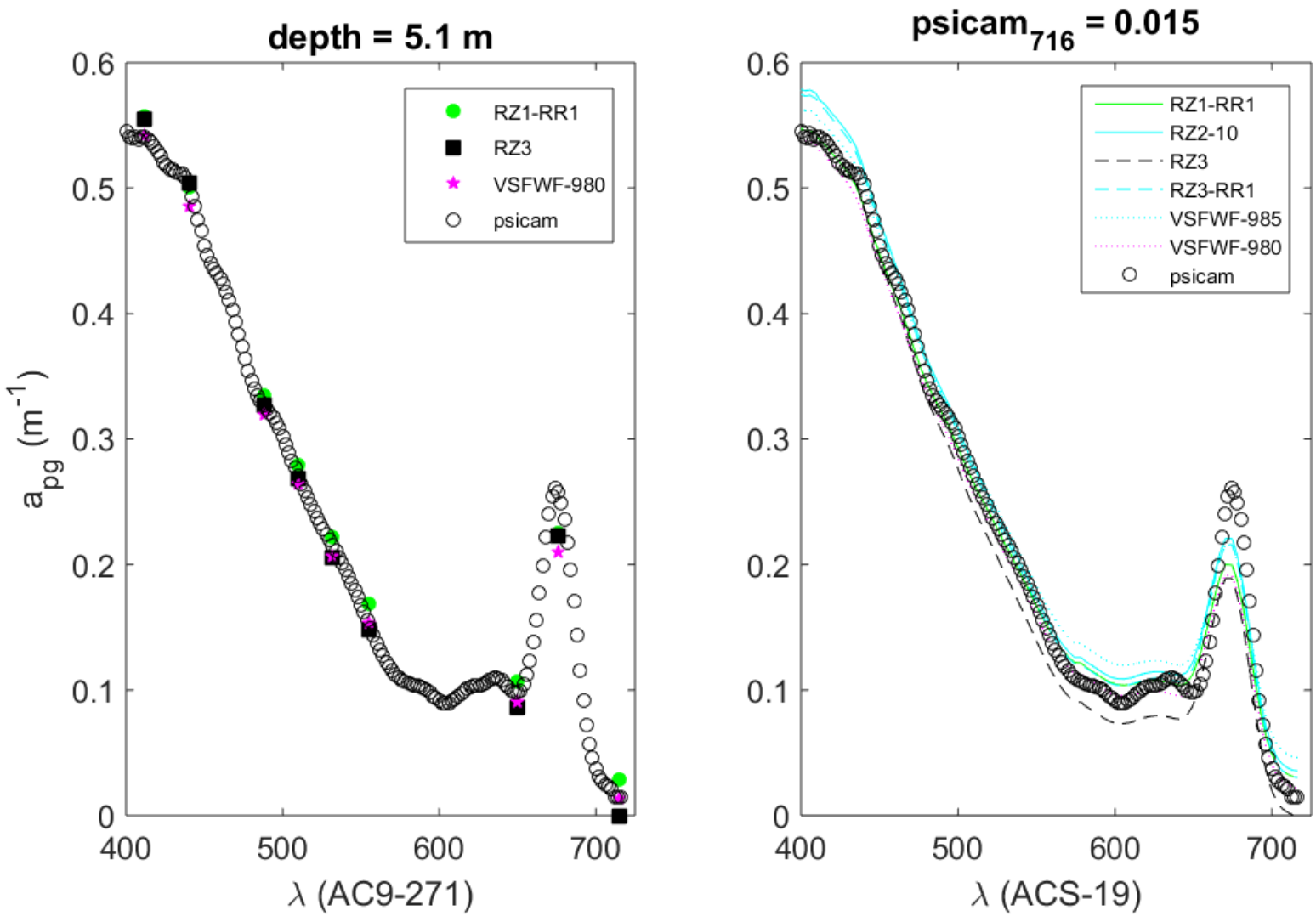

Scattering corrected ac data - best fits to PSICAM

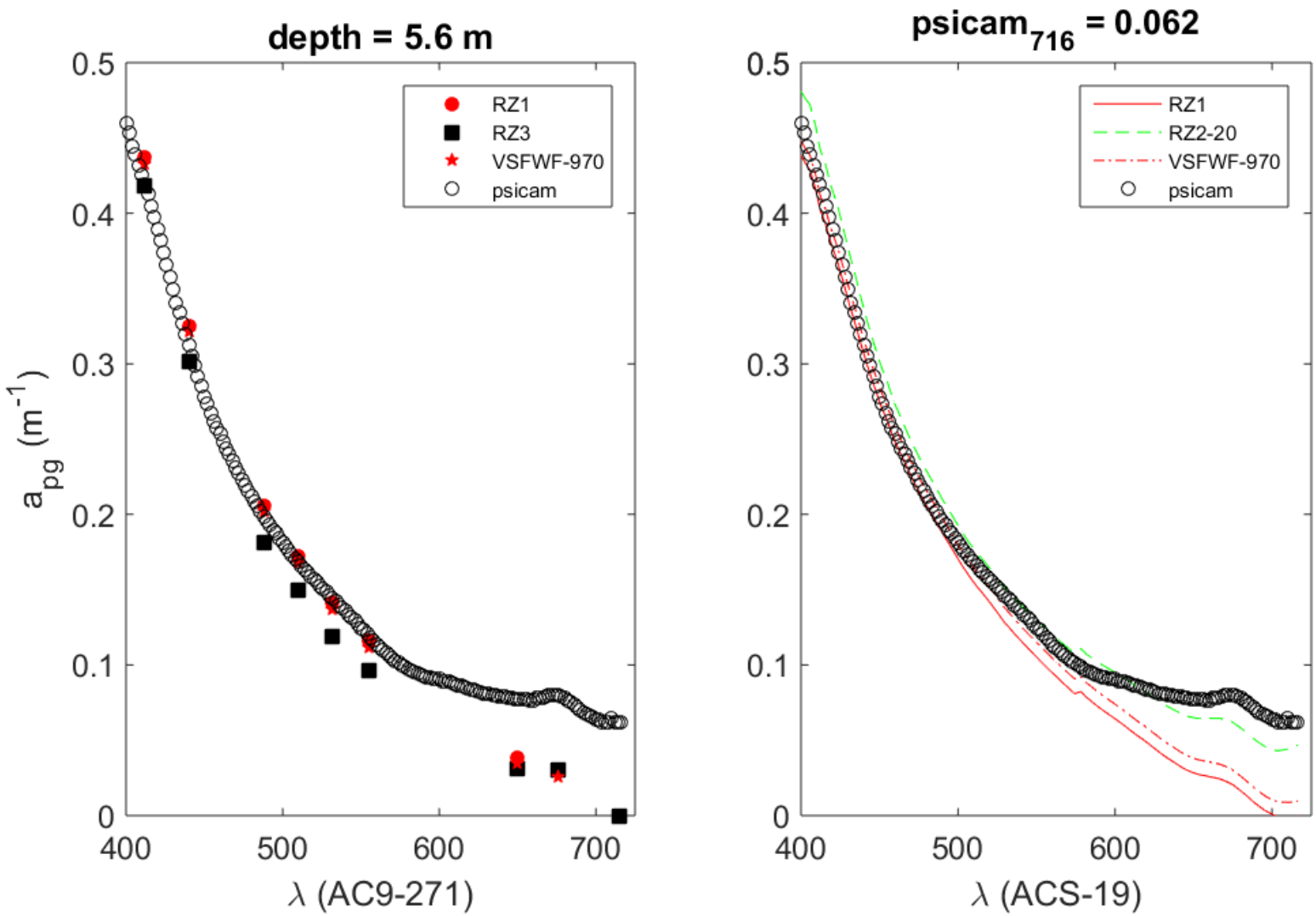

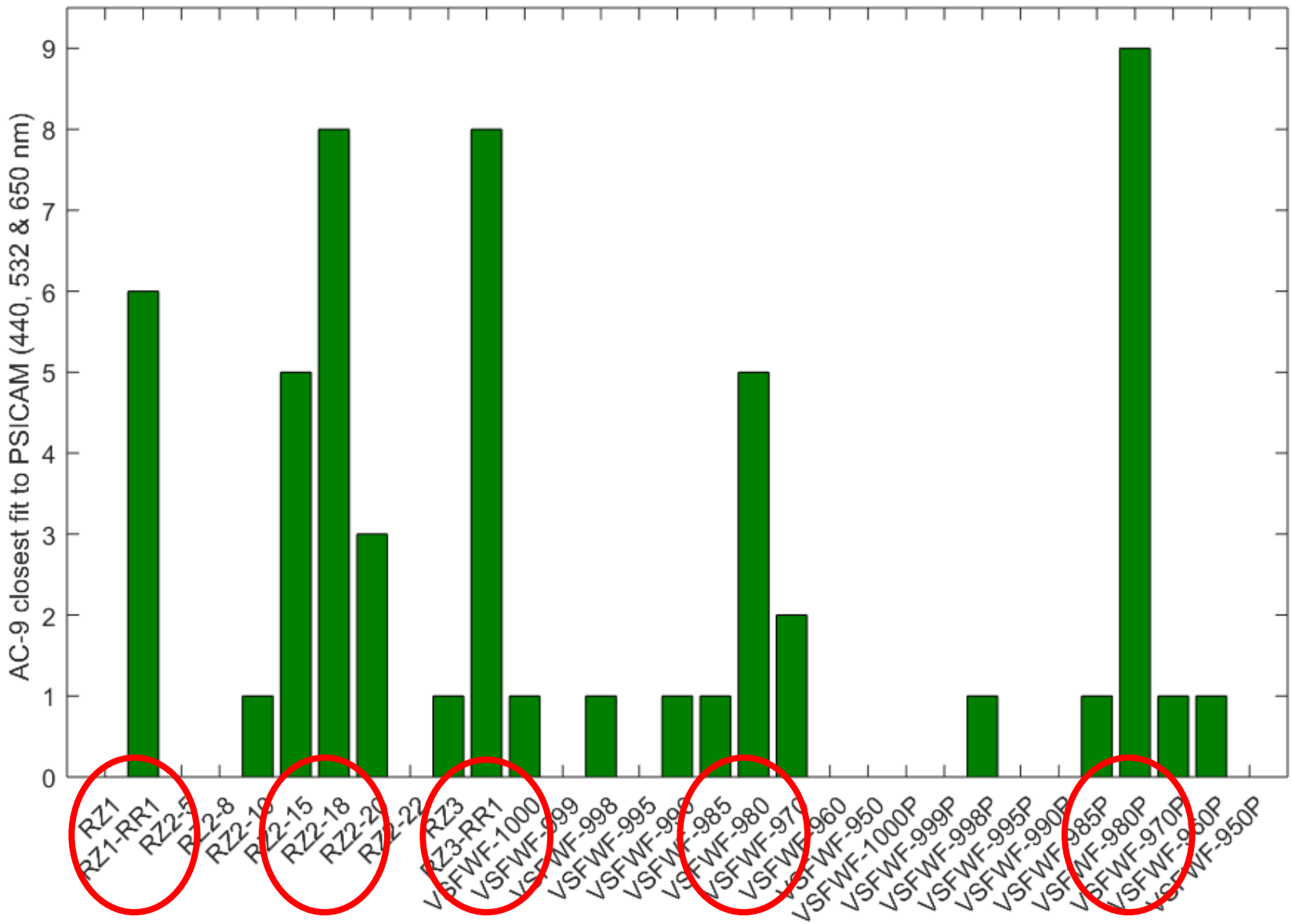
AC-9 closest fit to PSICAM (440, 532 & 650 nm)
0
1
2
3
4
5
6
7
8
9
RZ1
RZ1-RR1
RZ2-5
RZ2-8
RZ2-10
RZ2-15
RZ2-18
RZ2-20
RZ2-22
RZ3
RZ3-RR1
VSFWF-1000
VSFWF-999
VSFWF-998
VSFWF-995
VSFWF-990
VSFWF-985
VSFWF-980
VSFWF-970
VSFWF-960
VSFWF-950
VSFWF-1000P
VSFWF-999P
VSFWF-998P
VSFWF-995P
VSFWF-990P
VSFWF-985P
VSFWF-980P
VSFWF-970P
VSFWF-960P
VSFWF-950P

This year:

Continue ac data analysis –best practices for community
develop paper dealing with ac methods and uncertainties

Validation of ac corrections with independent measurements
leverage more data collections…
ICAM, PSICAM, OSCAR, filter pad

Depolarization ratio work - understand uncertainties in retrievals related to uncertainties in pure water backscattering

Participate with subgroups

* NASA VSF protocols